CHE 1411 L Group Project

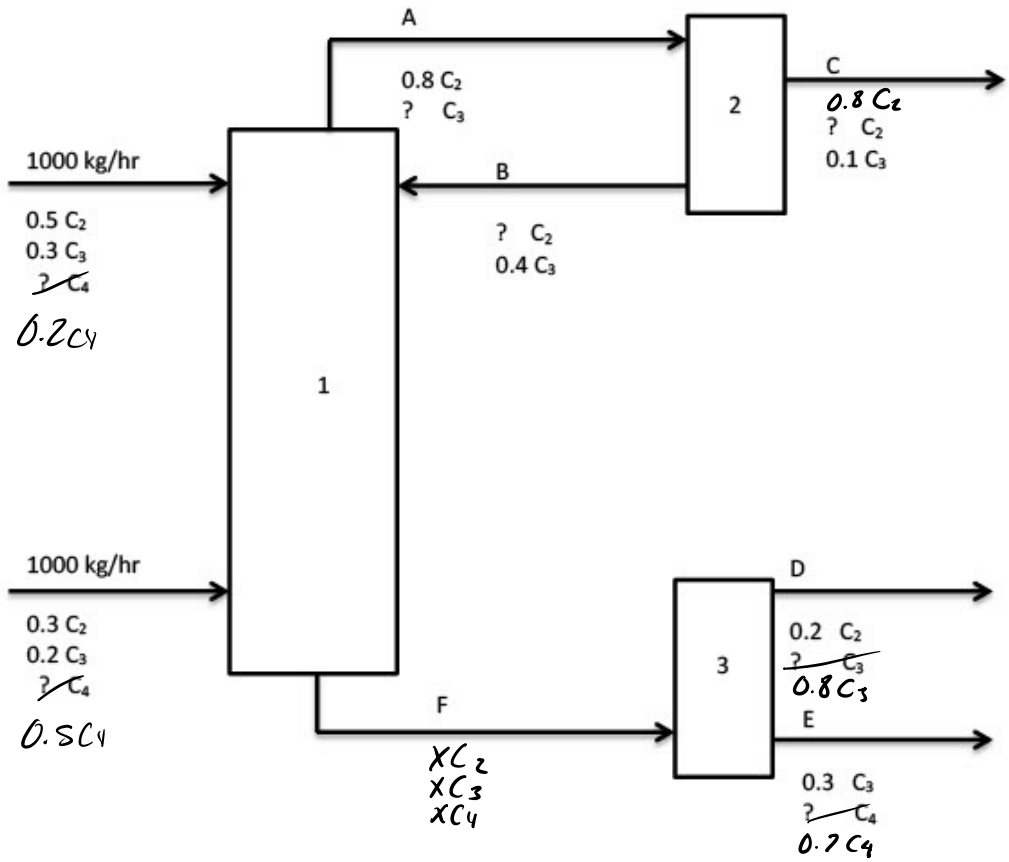

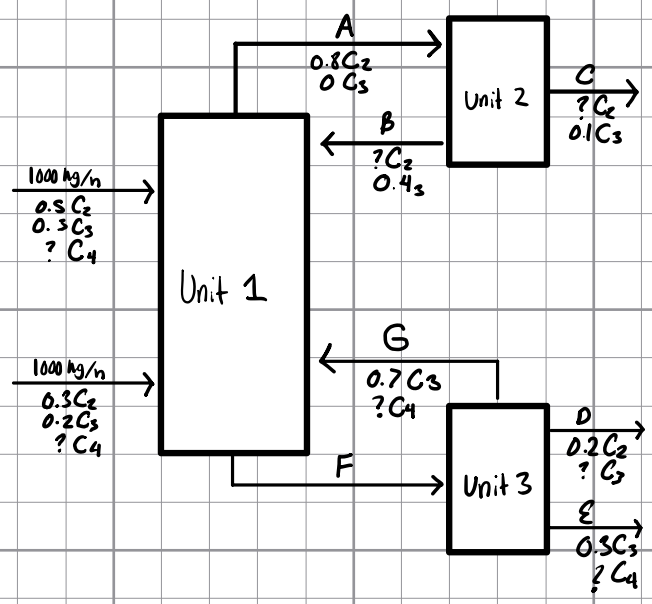
A
0.8C2
0 C3
Unit 2
C
?C2
0.1C3
B
?C2
0.4C3
1000 kg/h
0.5 C2
0.5 C3
? C4
Unit 1
G
0.7 C3
?C4
1000 kg/h
0.3C2
0.2C3
? C4
F
Unit 3
D
0.2C2
? C3
E
0.3C3
? C4